INSTALLATION GUIDE

Product code: P30S-5CCT

40 cm 30 W Dimmable Ceiling Light – 5 Colour

Licensed electrician recommended. The light plugs in, but only a licensed electrician may fit the ceiling plug base (AS/NZS 3000) – never wire the plug into the mains.

IN THE BOX

- 1 × 30 W LED ceiling light with 1.2 m cord and plug
- 1 × mounting bracket
- 2 × screws
- 1 × instruction sheet

YOU WILL NEED

- Drill and screwdriver
- Tape measure and pencil
- Step ladder

BEFORE YOU START

- You need a ceiling plug base (not in the box) above the light, within reach of the 1.2 m cord. Only a licensed electrician may fit it.
- Set the colour switch before fitting.
- To dim it, your electrician must fit a suitable LED dimmer on that circuit.
- Indoor, dry areas only (IP20).

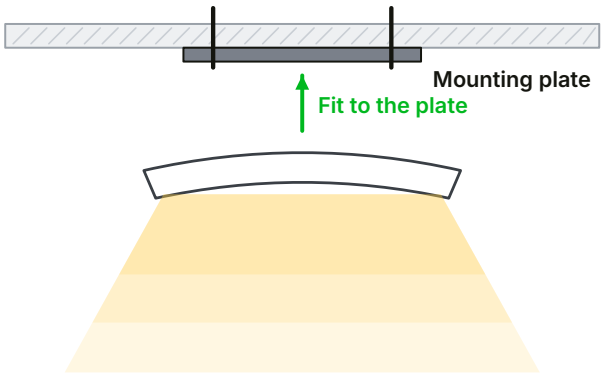

STEP BY STEP

1. Turn the power off at the switchboard.
2. Set the colour switch on the back of the light.
3. Hold the bracket on the ceiling, mark the holes, then drill and fix it with the 2 screws.
4. Pass the light's cord up through a hole in the ceiling and plug it into the plug base.
5. Fit the light onto the bracket and lock it in place as shown on the instruction sheet.
6. Turn the power on and test the light (and dimmer, if fitted).

SETTINGS & USE

- Colour switch: 3000 K, 4000 K, 5000 K, 5700 K or 6400 K.
- Dimmable – use an LED-rated dimmer fitted by an electrician.

DO NOT

- Don't cover the light with ceiling insulation.
- Don't use in wet areas or outdoors.
- Don't open the light – no user parts inside.

CARE & TROUBLESHOOTING

- Turn the power off, then wipe with a soft dry cloth.
- If it flickers when dimmed, try another LED-rated dimmer or call Greenhse.

Installation: Greenhse recommends that every product is installed by a licensed electrician to AS/NZS 3000 and local rules. Any work on 240 V wiring must be done by a licensed electrician. Incorrect installation can be unsafe and may void the warranty. **Warranty:** 3 years. Keep your invoice and the electrician's certificate of compliance. Questions? Call (08) 9297 2969 or visit greenhse.com.