INSTALLATION GUIDE

Product code: P24-RGBW-CCT

30 cm 24 W Smart Ceiling Light – RGB + White

Licensed electrician recommended. The light plugs in, but only a licensed electrician may fit the ceiling plug base (AS/NZS 3000) – never wire the plug into the mains.

IN THE BOX

- 1 × 24 W smart ceiling light with cord and plug
- 1 × mounting plate
- 1 × hand remote (batteries not included)

YOU WILL NEED

- Drill and screwdriver
- Tape measure and pencil
- Smartphone with the Smart Life app
- 2 × 1.5 V batteries for the remote

BEFORE YOU START

- You need a ceiling plug base (not in the box) above the light, within reach of its cord. Only a licensed electrician may fit it.
- Your WiFi must be 2.4 GHz and reach the light.
- Indoor, dry areas only.

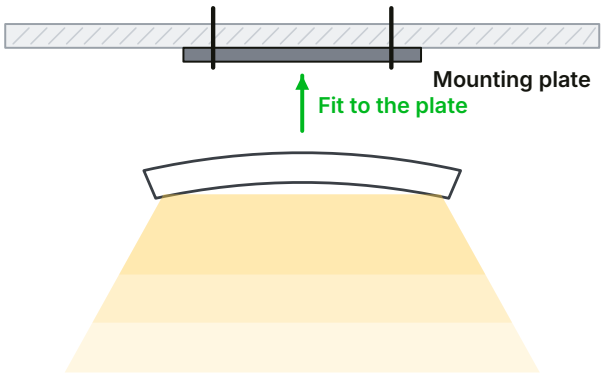

STEP BY STEP

1. Turn the power off at the switchboard.
2. Take the mounting plate off the light, hold it on the ceiling and mark the holes.
3. Drill and screw the mounting plate to the ceiling.
4. Pass the light's cord up through a hole in the ceiling and plug it into the plug base.
5. Fit the light onto the mounting plate and check it is secure.
6. Turn the power on, then add the light in the Smart Life app.

SETTINGS & USE

- App: install Smart Life, join your phone to 2.4 GHz WiFi and turn Bluetooth on. Turn the light on – it starts flashing – then add it in the app.
- Remote: fit 2 × 1.5 V batteries, turn the light on, then hold Setup for 3 seconds – the light flashes when paired.
- Google Home / Alexa: link your Smart Life account in their app.
- Front white and back RGB glow are controlled separately in the app.

DO NOT

- Don't use a wall dimmer – dim in the app or with the remote.
- Don't expect 5 GHz WiFi to work – use 2.4 GHz.
- Don't use in bathrooms or outdoors.

CARE & TROUBLESHOOTING

- Turn the power off, then wipe with a soft dry cloth.
- Many WiFi devices at home? Your modem may need a WiFi extender.

Installation: Greenhse recommends that every product is installed by a licensed electrician to AS/NZS 3000 and local rules. Any work on 240 V wiring must be done by a licensed electrician. Incorrect installation can be unsafe and may void the warranty. **Warranty:** 3 years. Keep your invoice and the electrician's certificate of compliance. Questions? Call (08) 9297 2969 or visit greenhse.com.