INSTALLATION GUIDE

Product code: P24S-WIFI

29 cm 24 W Smart WiFi Ceiling Light – Tunable White

Licensed electrician recommended. The light plugs in, but only a licensed electrician may fit the ceiling plug base (AS/NZS 3000) – never wire the plug into the mains.

IN THE BOX

- 1 × 24 W smart ceiling light with white cover
- 1 × mounting bracket with 2 sliding spring clips
- 1 × power cord with Australian plug
- Chrome or black cover (only if ordered)

YOU WILL NEED

- Drill and screwdriver
- Plaster saw or hole saw (new holes only)
- Smartphone with the Smart Life app

BEFORE YOU START

- You need a ceiling plug base (not in the box) above the light, within reach of its cord. Only a licensed electrician may fit it.
- Your WiFi must be 2.4 GHz and reach the light.
- Surface mount, or recess into a hole 60–250 mm wide.
- Indoor, dry areas only (IP20).

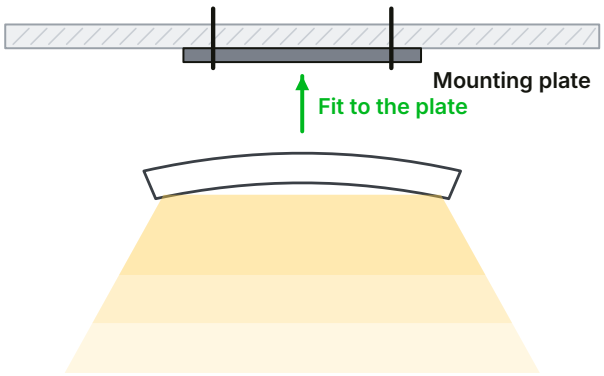

STEP BY STEP

1. Turn the power off at the switchboard.
2. Surface: screw the bracket to the ceiling and pass the cord up through a hole to the plug base. Recessed: slide the spring clips along the bracket to suit the hole, then push it into the hole.
3. Plug the light's cord into the ceiling plug base.
4. Push the light straight onto the bracket until it clicks into place.
5. Fit the chrome or black cover now if you bought one – it holds on by magnets.
6. Turn the power on and add the light in the Smart Life app.

SETTINGS & USE

- Pairing (use the wall switch): turn the light on, wait 10 seconds, turn it off and on, then switch it on-off-on-off-on. When it flashes fast, tap '+' in Smart Life.
- If pairing fails, use AP mode: do the on-off-on-off-on again until it flashes slowly, then join your phone to the 'SmartLife' WiFi hotspot.
- Google Home / Alexa: link your Smart Life account in their app.

DO NOT

- Don't use a wall dimmer – dim in the app. Leave the wall switch on, or the app can't reach the light.
- Don't expect 5 GHz WiFi to work – use 2.4 GHz.
- Don't pull or force the light off its bracket – it can break. Use the 'To remove' steps.

CARE & TROUBLESHOOTING

- Turn the power off, then wipe with a soft dry cloth.
- To remove: press one side of the frame in, then lift the light out from the opposite side.
- Many WiFi devices at home? Your modem may need a WiFi extender.

Installation: Greenhse recommends that every product is installed by a licensed electrician to AS/NZS 3000 and local rules. Any work on 240 V wiring must be done by a licensed electrician. Incorrect installation can be unsafe and may void the warranty. **Warranty:** 2 years. Keep your invoice and the electrician's certificate of compliance. Questions? Call (08) 9297 2969 or visit greenhse.com.