INSTALLATION GUIDE

Product code: P18E

23 cm 18 W Slim LED Ceiling Light – Natural White

Licensed electrician recommended. The light plugs in, but only a licensed electrician may fit the ceiling plug base (AS/NZS 3000) – never wire the plug into the mains.

IN THE BOX

- 1 × 18 W slim ceiling light with cord and plug
- 1 × mounting bracket
- 2 × spring clips

YOU WILL NEED

- Drill and screwdriver
- Hole saw (new holes only)
- Tape measure and pencil

BEFORE YOU START

- Surface mount, or recess into a hole about 65–200 mm wide (old downlight or oyster hole).
- You need a ceiling plug base (not in the box) above the light, within reach of the cord. Only a licensed electrician may fit it.
- Indoor, dry areas only (IP20).

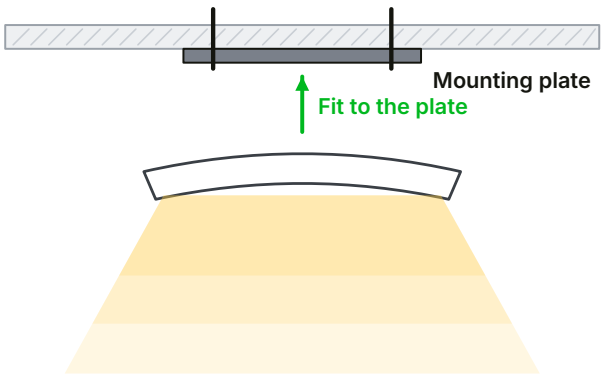

STEP BY STEP

1. Turn the power off at the switchboard.
2. Surface: screw the bracket to the ceiling and pass the cord up through a hole to the plug base.
3. Recessed: clip the 2 springs onto the bracket, feed the cord through the bracket's centre hole and fix the bracket to the light.
4. Plug the cord into the ceiling plug base.
5. Surface: twist the light onto the bracket (about 35°) until it locks. Recessed: fold the springs up and push the light into the hole.
6. Turn the power on and test.

DO NOT

- Don't use with a dimmer – this light is not dimmable.
- Don't use in wet areas or outdoors.
- Don't open the light – no user parts inside.

CARE & TROUBLESHOOTING

- Turn the power off, then wipe with a soft dry cloth.
- To remove a surface-mounted light, twist it back off the bracket.

Installation: Greenhse recommends that every product is installed by a licensed electrician to AS/NZS 3000 and local rules. Any work on 240 V wiring must be done by a licensed electrician. Incorrect installation can be unsafe and may void the warranty. **Warranty:** 1 year. Keep your invoice and the electrician's certificate of compliance. Questions? Call (08) 9297 2969 or visit greenhse.com.