INSTALLATION GUIDE

Product code: P18SE-CCT

21.7 cm 18 W Slim LED Ceiling Light – Tricolour

Licensed electrician recommended. The light plugs in, but only a licensed electrician may fit the ceiling plug base (AS/NZS 3000) – never wire the plug into the mains.

IN THE BOX

- 1 × 18 W slim ceiling light
- 1 × mounting bracket with 2 sliding spring clips
- 1 × safety cord
- 1 × 1.2 m power cord with Australian plug

YOU WILL NEED

- Drill and screwdriver
- Plaster saw or hole saw (new holes only)
- Tape measure and pencil

BEFORE YOU START

- Surface mount, or recess into a hole 55–175 mm wide (an old downlight hole is fine).
- You need a ceiling plug base (not in the box) above the light, within reach of the 1.2 m cord. Only a licensed electrician may fit it.
- Set the colour switch before fitting.
- Indoor, dry areas only (IP20).

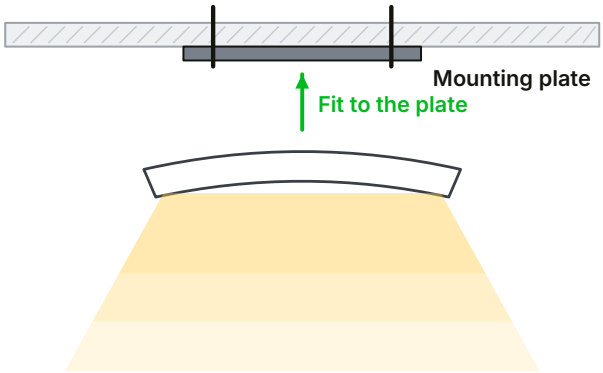

STEP BY STEP

1. Turn the power off at the switchboard.
2. Set the colour switch on the back to 4000 K, 5000 K or 6500 K.
3. Surface: screw the bracket to the ceiling and pass the cord up through a hole to the plug base. Recessed: slide the spring clips along the bracket to suit the hole, then push it into the hole.
4. Clip the safety cord between the light and the bracket.
5. Connect the power cord to the light and plug it into the ceiling plug base.
6. Push the light straight onto the bracket until it clicks into place.
7. Turn the power on and test.

SETTINGS & USE

- Colour switch on the back: 4000 K, 5000 K or 6500 K.

DO NOT

- Don't use with a dimmer – this light is not dimmable.
- Don't force the light off the bracket – it can break. Follow the removal steps.
- Don't use in wet areas or outdoors.

CARE & TROUBLESHOOTING

- Turn the power off, then wipe with a soft dry cloth.
- To remove: press one side of the frame in, then lift the light out from the opposite side.

Installation: Greenhse recommends that every product is installed by a licensed electrician to AS/NZS 3000 and local rules. Any work on 240 V wiring must be done by a licensed electrician. Incorrect installation can be unsafe and may void the warranty. **Warranty:** 3 years. Keep your invoice and the electrician's certificate of compliance. Questions? Call (08) 9297 2969 or visit greenhse.com.